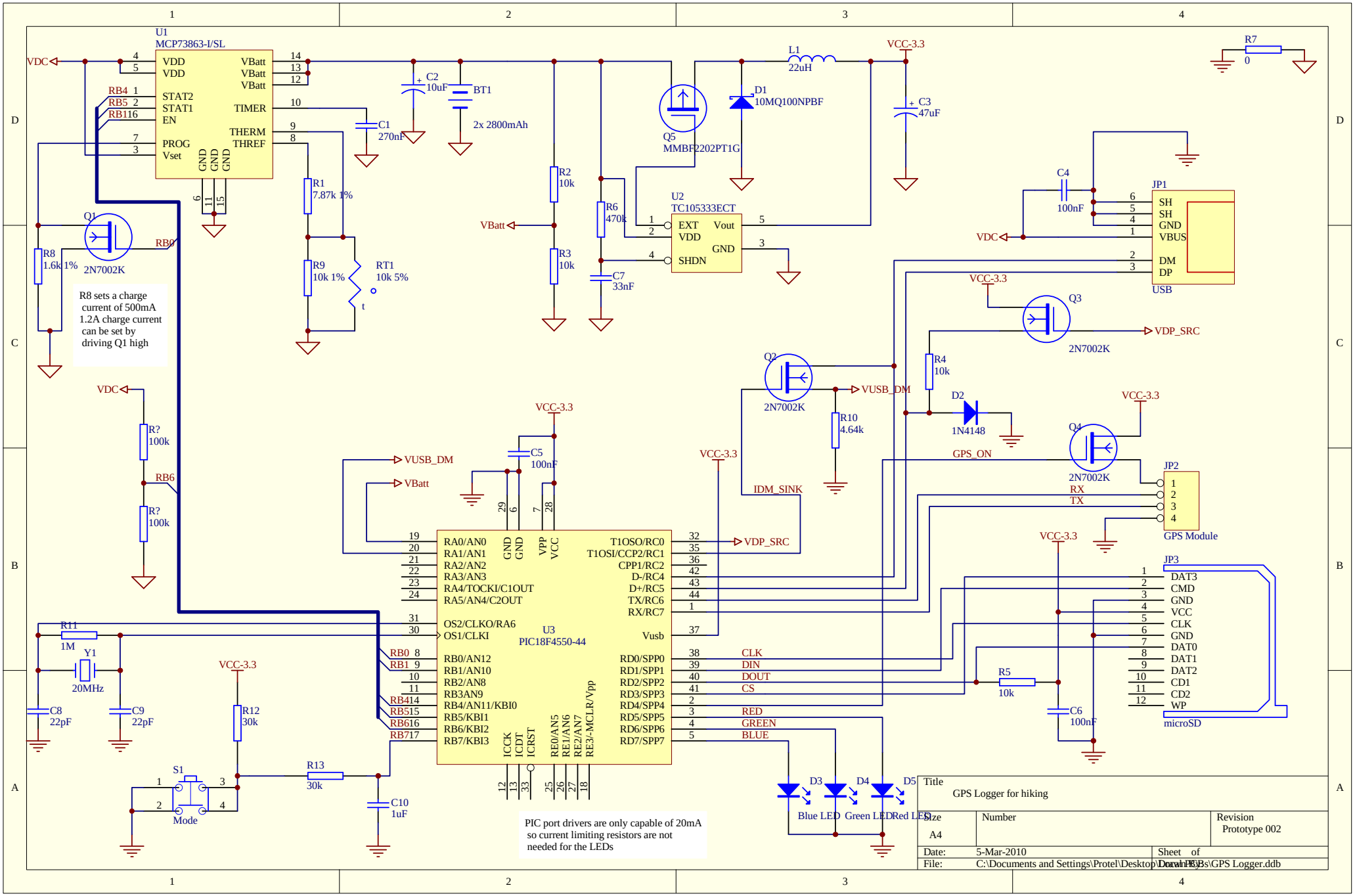
U1
MCP73863-I/SL
VDD
VDD
VBatt
VBatt
VBatt
STAT2
STAT1
EN
TIMER
THERM
THREF
PROG
Vset
GND
GND
GND
VDC
RB4
RB5
RB116
C1
270nF
C2
10uF
BT1
2x 2800mAh
R1
7.87k 1%
R9
10k 1%
RT1
10k 5%
Q1
2N7002K
RB0
R8
1.6k 1%
R8 sets a charge current of 500mA
1.2A charge current can be set by driving Q1 high
R2
10k
R3
10k
R6
470k
C7
33nF
VBatt
Q5
MMBF2202PT1G
D1
10MQ100NPBF
L1
22uH
VCC-3.3
C3
47uF
U2
TC105333ECT
EXT
VDD
SHDN
Vout
GND
R7
0
C4
100nF
JP1
SH
SH
GND
VBUS
DM
DP
USB
VDC
VCC-3.3
Q3
2N7002K
VDP_SRC
Q2
2N7002K
VUSB_DM
R4
10k
R10
4.64k
D2
1N4148
VCC-3.3
Q4
2N7002K
GPS_ON
JP2
RX
TX
GPS Module
VCC-3.3
JP3
DAT3
CMD
GND
VCC
CLK
GND
DAT0
DAT1
DAT2
CD1
CD2
WP
microSD
C6
100nF
R5
10k
VDC
R?
100k
RB6
R?
100k
VUSB_DM
VBatt
VCC-3.3
C5
100nF
VCC-3.3
IDM_SINK
U3
PIC18F4550-44
RA0/AN0
RA1/AN1
RA2/AN2
RA3/AN3
RA4/TOCKI/C1OUT
RA5/AN4/C2OUT
OS2/CLKO/RA6
OS1/CLKI
RB0/AN12
RB1/AN10
RB2/AN8
RB3AN9
RB4/AN11/KBI0
RB5/KBI1
RB6/KBI2
RB7/KBI3
GND
GND
VPP
VCC
T1OSO/RC0
T1OSI/CCP2/RC1
CPP1/RC2
D-/RC4
D+/RC5
TX/RC6
RX/RC7
Vusb
RD0/SPP0
RD1/SPP1
RD2/SPP2
RD3/SPP3
RD4/SPP4
RD5/SPP5
RD6/SPP6
RD7/SPP7
ICCK
ICDT
ICRST
RE0/AN5
RE1/AN6
RE2/AN7
RE3/-MCLR/Vpp
VDP_SRC
CLK
DIN
DOUT
CS
RED
GREEN
BLUE
R11
1M
Y1
20MHz
C8
22pF
C9
22pF
VCC-3.3
R12
30k
S1
Mode
R13
30k
C10
1uF
D3
D4
D5
Blue LED
Green LED
Red LED
PIC port drivers are only capable of 20mA so current limiting resistors are not needed for the LEDs
Title
GPS Logger for hiking
Size
A4
Number
Revision
Prototype 002
Date:
5-Mar-2010
Sheet of
File:
C:\Documents and Settings\Protel\Desktop\Drawings\GPS Logger.ddb
Drawn By: